Concept E	台上型花洒龙头/6＂附加龙头 (8＂双孔双控) www.f-ews.com	Model No. M99E-306A Item No. 12012423

产品尺寸图

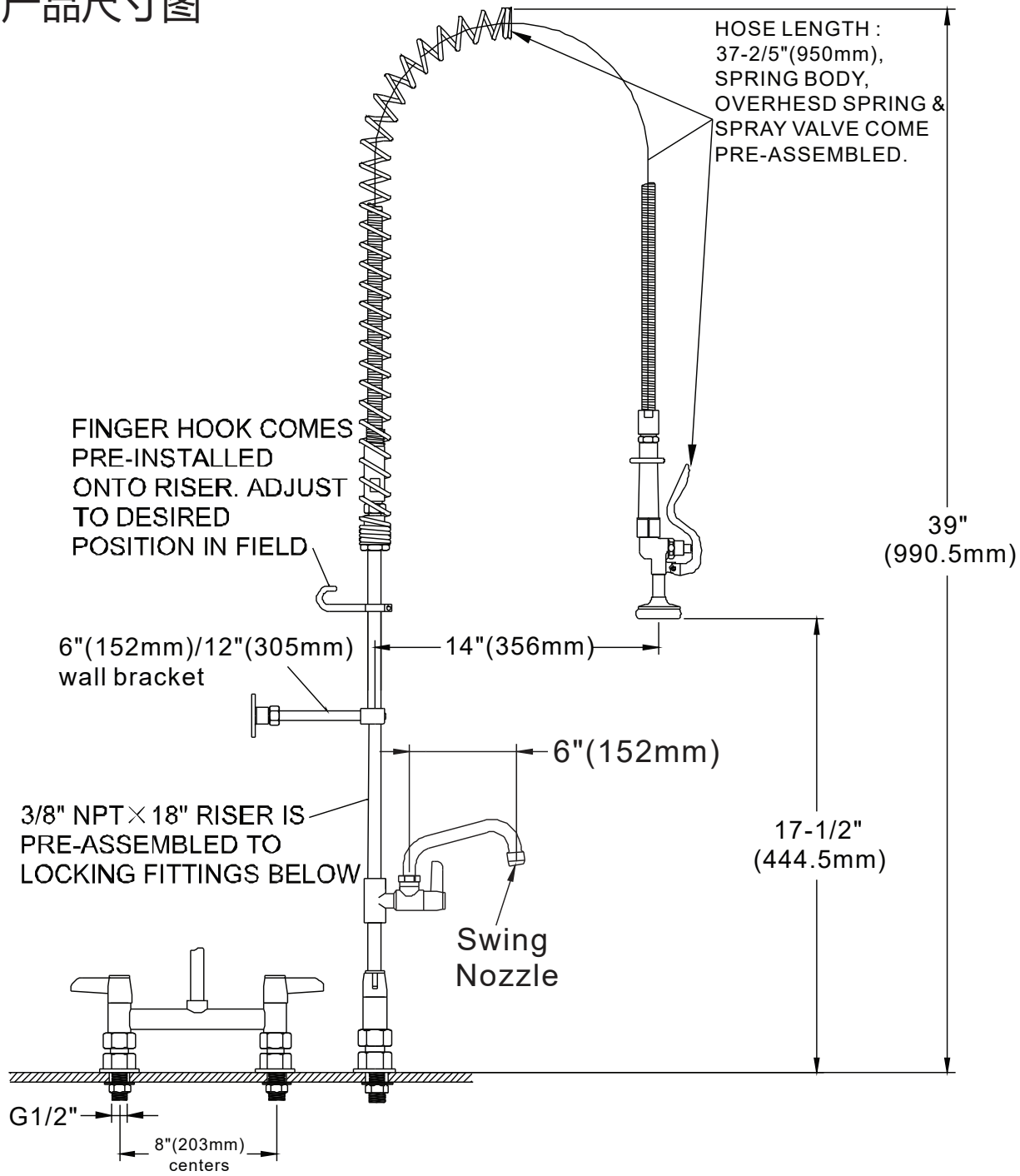

Products Specifications: 使用说明	Drawn: -	Checked: -	Approved: -
	Scale:		Date: 2016/10/8