ALTO SHAAM®

Hot Carving Shelf
Electric

Models:

100-HSL/BCS-2
100-HSL/BCS-2S

- **INSTALLATION**
- **OPERATION**
- **MAINTENANCE**

HALO HEAT®

24•7 Your Service Hotline 1-800-558-8744

W164 N9221 Water Street • P.O. Box 450 • Menomonee Falls, Wisconsin 53052-0450 USA
PHONE: 262.251.3800 • 800.558.8744 USA/CANADA FAX: 262.251.7067 • 800.329.8744 U.S.A. ONLY
WEBSITE: www.alto-shaam.com

PRINTED IN U.S.A. #802/1 • 06/07

DELIVERY

This Alto-Shaam appliance has been thoroughly tested and inspected to insure only the highest quality unit is provided. Upon receipt, check for any possible shipping damage and report it at once to the delivering carrier. ***See Transportation Damage and Claims section located in this manual.***

This appliance, complete with unattached items and accessories, may have been delivered in one or more packages. Check to ensure that all standard items and options have been received with each model as ordered.

Save all the information and instructions packed with the appliance. Complete and return the warranty card to the factory as soon as possible to assure prompt service in the event of a warranty parts and labor claim.

This manual must be read and understood by all people using or installing the equipment model. Contact the Alto-Shaam service department if you have any questions concerning installation, operation, or maintenance.

NOTE: All claims for warranty must include the full model number and serial number of the unit.

UNPACKING

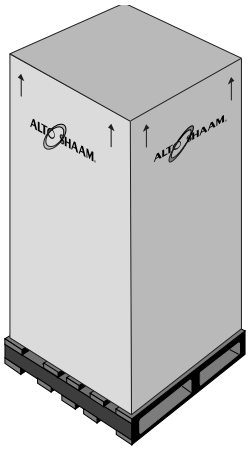

1. Carefully remove the appliance from the carton or crate.

   NOTE: Do not discard the carton and other packaging material until you have inspected the unit for hidden damage and tested it for proper operation.

2. Read all instructions in this manual carefully before initiating the installation of this appliance.

   DO NOT DISCARD THIS MANUAL. This manual is considered to be part of the appliance and is to be provided to the owner or manager of the business or to the person responsible for training operators. ***Additional manuals are available from the Alto-Shaam service department.***

3. Remove all protective plastic film, packaging materials, and accessories from the appliance before connecting electrical power. Store any accessories in a convenient place for future use.

SAFETY PROCEDURES AND PRECAUTIONS

Knowledge of proper procedures is essential to the safe operation of electrically and/or gas energized equipment. In accordance with generally accepted product safety labeling guidelines for potential hazards, the following signal words and symbols may be used throughout this manual.

DANGER	Used to indicate the presence of a hazard that **will** cause severe personal injury, death, or substantial property damage if the warning included with this symbol is ignored.
WARNING	Used to indicate the presence of a hazard that **can** cause personal injury, possible death, or major property damage if the warning included with this symbol is ignored.
CAUTION	Used to indicate the presence of a hazard that can or will cause minor or moderate personal injury or property damage if the warning included with this symbol is ignored.
CAUTION	Used to indicate the presence of a hazard that can or will cause minor personal injury, property damage, or a potential unsafe practice if the warning included with this symbol is ignored.
NOTE:	Used to notify personnel of installation, operation, or maintenance information that is important but not hazard related.

1. This appliance is intended to cook, hold or process foods for the purpose of human consumption. No other use for this appliance is authorized or recommended.
2. This appliance is intended for use in commercial establishments where all operators are familiar with the purpose, limitations, and associated hazards of this appliance. Operating instructions and warnings must be read and understood by all operators and users.
3. Any troubleshooting guides, component views, and parts lists included in this manual are for general reference only and are intended for use by qualified technical personnel.
4. This manual should be considered a permanent part of this appliance. This manual and all supplied instructions, diagrams, schematics, parts lists, notices, and labels must remain with the appliance if the item is sold or moved to another location.

NOTE

For equipment delivered for use in any location regulated by the following directive:

DO NOT DISPOSE OF ELECTRICAL OR ELECTRONIC EQUIPMENT WITH OTHER MUNICIPAL WASTE.

INSTALLATION

SITE INSTALLATION

The carving shelf, complete with unattached items and accessories should be checked to ensure all the following items have been received as standard with each unit.

4: 1" (25mm) Legs
4: Nylon Screws
1: Cutting Board
2: Lamps
4: Sneeze Guard Mounting Screws (some models)

Alto-Shaam hot carving shelves are designed for the purpose of maintaining hot food at a temperature for safe consumption. The unit must be installed on a level surface in a location that will permit the equipment to function for its intended purpose and allow adequate access for proper cleaning and maintenance.

The carving shelf must not be installed in any area where it will be affected by steam, grease, dripping water, high temperatures, or any other severely adverse conditions.

NET WEIGHT	
40 lbs (18 kg)	with sneeze guard 45 lbs. (20 kg)

CAUTION

TO PREVENT PERSONAL INJURY, USE CAUTION WHEN MOVING OR LEVELING THIS APPLIANCE.

DANGER

IMPROPER INSTALLATION, ALTERATION, ADJUSTMENT, SERVICE OR MAINTENANCE COULD RESULT IN SEVERE INJURY, DEATH OR CAUSE PROPERTY DAMAGE.

1. **WHEN THE UNIT IS EQUIPPED WITH A SNEEZE GUARD**:

   Refer to the Service Views located in this manual. Swing the sneeze guard up to the proper position and secure each side with the two (2) additional screws provided. Tighten all four (4) screws to mount the sneeze guard securely.

2. The hot carving shelf is designed to be mounted directly on top of a Halo Heat cook/hold oven or holding cabinet. The shelf can also be used as a free-standing unit without the Halo Heat cabinet.

   A. **CABINET MOUNTED SHELVES:**
   Install the four (4) nylon screws in the leg mounting holes to protect the top surface of the cabinet and to provide a more stable placement between the shelf and the cabinet. Do not install the 1" (25mm) equipment legs. Place the carvery on top of the cabinet.

   B. **FREE-STANDING SHELVES:**
   Install the 1" (25mm) legs before operating the shelf. Failure to install the 1" legs prior to heating the shelf could result in damage to the surface on which the shelf is placed, may pose a potential fire hazard, and nullifies the validity of the UL listing mark.

3. Level the appliance from side-to-side and back-to-back with the use of a spirit level.

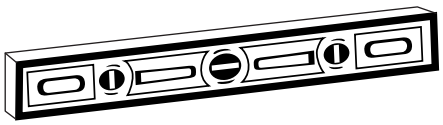

INSTALLATION

SITE INSTALLATION

Exterior Dimensions

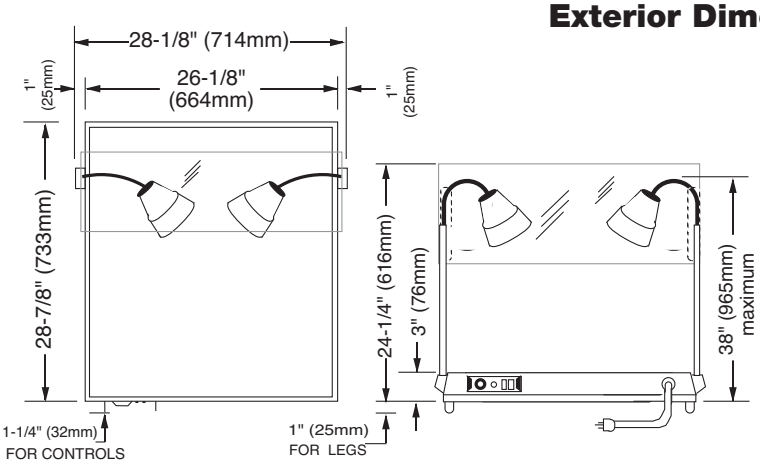

100-HSL/BCS-2
100-HSL/BCS-2S

Options and Accessories

Carving Holder
- Prime Rib HL-2635
- Steamship or Cafeteria Round 4459

Cutting Board, with gravy lane, 18" x 24" x 1/2" (457mm x 610mm x 13mm) BA-2054

INSTALLATION

ELECTRICAL CONNECTION

DANGER

ENSURE POWER SOURCE MATCHES VOLTAGE STAMPED ON APPLIANCE NAMEPLATE

DANGER

ELECTRICAL CONNECTIONS MUST BE MADE BY A QUALIFIED SERVICE TECHNICIAN IN ACCORDANCE WITH APPLICABLE ELECTRICAL CODES.

DANGER

To avoid electrical shock, this appliance MUST be adequately grounded in accordance with local electrical codes or, in the absence of local codes, with the current edition of the National Electrical Code ANSI/NFPA No. 70. In Canada, all electrical connections are to be made in accordance with CSA C22.1, Canadian Electrical Code Part 1 or local codes.

1. An identification tag is permanently mounted on the unit.

2. If necessary, a proper receptacle or permanent wiring for this unit must be installed by a licensed electrician in accordance with applicable local electrical codes.

3. Plug the unit into a properly grounded receptacle ONLY, positioning the unit so the power supply cord is easily accessible in case of an emergency. Arcing will occur when connecting or disconnecting the unit unless all controls are in the OFF position.

230V:

To prevent an electrical shock hazard between the appliance and other appliances or metal parts in close vicinity, an equalization-bonding stud is provided. An equalization bonding lead must be connected to this stud and the other appliances / metal parts to provide sufficient protection against potential difference. The terminal is marked with the following symbol.

NOTE: The appliance must be connected to an electrical circuit that is protected by an external GFCI outlet.

ELECTRICAL

VOLTAGE	PHASE	CYCLE/ HZ	AMPS	kW		
125	1	50/60	8.0	1.0	NEMA 5-15P 15A 125V PLUG	
230	1	50/60	4.5	1.0	CEE 7/7 220-233V PLUG	

DANGER

IMPROPER INSTALLATION, ALTERATION, ADJUSTMENT, SERVICE OR MAINTENANCE COULD RESULT IN SEVERE INJURY, DEATH OR CAUSE PROPERTY DAMAGE.

OPERATING

USER SAFETY INFORMATION

This appliance is intended for use in commercial establishments by qualified personnel who are familiar with the purpose, limitations, and associated hazards of this appliance. Operating instructions and warnings must be read and understood by all operators and users.

PRODUCT CAPACITY
70 lbs (31.7 kg) MAX. (LARGE STEAMSHIP ROUND)

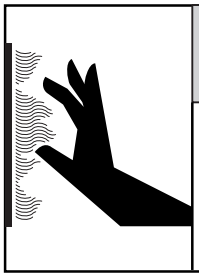

CAUTION

METAL PARTS OF THIS EQUIPMENT BECOME EXTREMELY HOT WHEN IN OPERATION. TO AVOID BURNS, ALWAYS USE HAND PROTECTION WHEN OPERATING THIS APPLIANCE.

DANGER

DISCONNECT UNIT FROM POWER SOURCE BEFORE CLEANING OR SERVICING.

HEATING CHARACTERISTICS

The shelf is equipped with a special, low-heat-density, heating cable. Through the Halo Heat concept, the heating cable is mounted against the top surface of the shelf to provide an evenly applied heat source, controlled by a thermostat. even heat application, the quality of a food product is maintained up to as much as several hours.

START-UP OPERATION

BEFORE INITIAL USE:

Clean the metal surface exterior of the appliance with a clean, damp cloth and mild soap solution. Rinse carefully.

NOTE:

Clean the acrylic sneeze guard with soap or mild detergent and water. Dry with a clean, damp chamois. Grease and oil may be removed with naphtha or hexane. Do not use commercial or household cleaners containing ammonia. To avoid scratching, do not use dry cloths or scouring compounds.

1. Turn power switch ON.
2. Turn lamp switch ON.
3. The base of the shelf is equipped with a thermostat indicating a range of 1 through 10. Set the dial at 8 to preheat the shelf. When the indicator light goes out, the unit is preheated.
4. The product must be at the proper internal temperature before transferring to the carving shelf. Use a meat thermometer to check the internal temperature of the product being held. Adjust the thermostat on the shelf to give the best overall setting based on the internal product temperature.
5. The proper temperature range for the products being held will depend on the type and quantity of product. When holding food for prolonged periods, it is advisable to periodically check the internal temperature of each item with a food thermometer to assure maintenance of the proper temperature range of 140° to 160°F (60° to 71°C). Read this manual for additional information on safe internal product temperatures, general holding guidelines, and sanitation procedures.

➤ **Use hand protection when handling hot items.**

➤ **DO NOT use knives or utensils on the hot shelf surface. A cutting board is supplied.**

GENERAL HOLDING GUIDELINES

Chefs, cooks and other specialized food service personnel employ varied methods of cooking. Proper holding temperatures for a specific food product must be based on the moisture content of the product, product density, volume, and proper serving temperatures. Safe holding temperatures must also be correlated with palatability in determining the length of holding time for a specific product.

Halo Heat maintains the maximum amount of product moisture content without the addition of water, water vapor, or steam. Maintaining maximum natural product moisture preserves the natural flavor of the product and provides a more genuine taste. In addition to product moisture retention, the gentle properties of Halo Heat maintain a consistent temperature throughout the cabinet without the necessity of a heat distribution fan, thereby preventing further moisture loss due to evaporation or dehydration.

When product is removed from a high temperature cooking environment for immediate transfer into equipment with the lower temperature required for hot food holding, condensation can form on the outside of the product and on the inside of plastic containers used in self-service applications. Allowing the product to release the initial steam and heat produced by high temperature cooking can alleviate this condition. To preserve the safety and quality of freshly cooked foods however, a maximum of 1 to 2 minutes must be the only time period allowed for the initial heat to be released from the product.

This unit is equipped with a thermostat control between 60° and 200°F (16° and 93°C). If the unit is equipped with vents, close the vents for moist holding and open the vents for crisp holding. Use a metal-stemmed thermometer to measure the internal temperature of the product being held. Adjust the thermostat setting to achieve the best overall setting based on internal product temperature.

HOLDING TEMPERATURE RANGE		
MEAT	FAHRENHEIT	CELSIUS
BEEF ROAST — Rare	140°F	60°C
BEEF ROAST — Med/Well Done	160°F	71°C
BEEF BRISKET	160° — 175°F	71° — 79°C
CORN BEEF	160° — 175°F	71° — 79°C
PASTRAMI	160° — 175°F	71° — 79°C
PRIME RIB — Rare	140°F	60°C
STEAKS — Broiled/Fried	140° — 160°F	60° — 71°C
RIBS — Beef or Pork	160°F	71°C
VEAL	160° — 175°F	71° — 79°C
HAM	160° — 175°F	71° — 79°C
PORK	160° — 175°F	71° — 79°C
LAMB	160° — 175°F	71° — 79°C
POULTRY		
CHICKEN — Fried/Baked	160° — 175°F	71° — 79°C
DUCK	160° — 175°F	71° — 79°C
TURKEY	160° — 175°F	71° — 79°C
GENERAL	160° — 175°F	71° — 79°C
FISH/ SEAFOOD		
FISH — Baked/Fried	160° — 175°F	71° — 79°C
LOBSTER	160° — 175°F	71° — 79°C
SHRIMP — Fried	160° — 175°F	71° — 79°C
BAKED GOODS		
BREADS/ROLLS	120° — 140°F	49° — 60°C
MISCELLANEOUS		
CASSEROLES	160° — 175°F	71° — 79°C
DOUGH — Proofing	80° — 100°F	27° — 38°C
EGGS —Fried	150° — 160°F	66° — 71°C
FROZEN ENTREES	160° — 175°F	71° — 79°C
HORS D'OEUVRES	160° — 180°F	71° — 82°C
PASTA	160° — 180°F	71° — 82°C
PIZZA	160° — 180°F	71° — 82°C
POTATOES	180°F	82°C
PLATED MEALS	180°F	82°C
SAUCES	140° — 200°F	60° — 93°C
SOUP	140° — 200°F	60° — 93°C
VEGETABLES	160° — 175°F	71° — 79°C

The holding temperatures listed are suggested guidelines only.

CLEANING AND PREVENTIVE MAINTENANCE

PROTECTING STAINLESS STEEL SURFACES

It is important to guard against corrosion in the care of stainless steel surfaces. Harsh, corrosive, or inappropriate chemicals can completely destroy the protective surface layer of stainless steel. Abrasive pads, steel wool, or metal implements will abrade surfaces causing damage to this protective coating and will eventually result in areas of corrosion. Even water, particularly hard water that contains high to moderate concentrations of chloride, will cause oxidation and pitting that result in rust and corrosion. In addition, many acidic foods spilled and left to remain on metal surfaces are contributing factors that will corrode surfaces.

Proper cleaning agents, materials, and methods are vital to maintaining the appearance and life of this appliance. Spilled foods should be removed and the area wiped as soon as possible but at the very least, a minimum of once a day. Always thoroughly rinse surfaces after using a cleaning agent and wipe standing water as quickly as possible after rinsing.

CLEANING AGENTS

Use non-abrasive cleaning products designed for use on stainless steel surfaces. Cleaning agents must be chloride-free compounds and must not contain quaternary salts. Never use hydrochloric acid (muriatic acid) on stainless steel surfaces. Always use the proper cleaning agent at the manufacturer's recommended strength. Contact your local cleaning supplier for product recommendations.

CLEANING MATERIALS

The cleaning function can usually be accomplished with the proper cleaning agent and a soft, clean cloth. When more aggressive methods must be employed, use a non-abrasive scouring pad on difficult areas and make certain to scrub with the visible grain of surface metal to avoid surface scratches. Never use wire brushes, metal scouring pads, or scrapers to remove food residue.

CAUTION

TO PROTECT STAINLESS STEEL SURFACES, COMPLETELY AVOID THE USE OF ABRASIVE CLEANING COMPOUNDS, CHLORIDE BASED CLEANERS, OR CLEANERS CONTAINING QUATERNARY SALTS. NEVER USE HYDROCHLORIC ACID (MURIATIC ACID) ON STAINLESS STEEL. NEVER USE WIRE BRUSHES, METAL SCOURING PADS OR SCRAPERS.

CARE AND CLEANING

The cleanliness and appearance of this equipment will contribute considerably to operating efficiency and savory, appetizing food. Good equipment that is kept clean works better and lasts longer.

WARNING

Warranty does not apply if the carving shelf is flooded or immersed in water.

CLEAN THE CARVING SHELF AFTER EACH USE:

1. Disconnect the shelf from the power source.
2. Remove cutting board after each use. Clean and sanitize separately following applicable state or local health sanitation ordinances. Air dry the board on a clean, flat surface to prevent board from warping. If the board becomes warped, heating will restore flexibility to facilitate flattening. Warped boards may be heated on the carving shelf surface, in a preheated Combitherm combination oven/steamer for 10 minutes on the steam program, or in a preheated Halo Heat cook and hold oven for 15 minutes at 250°F (121°C).
3. Clean metal surface with mild soap solutions only. DO NOT clean with lye or alkaline based cleaners or any abrasive cleaners. Rinse carefully with a clean sponge and water to remove all soap or detergent residue.

4. DO NOT use knives or utensils on the hot shelf surface. A cutting board is supplied.
5. Clean the acrylic sneeze guard with soap or mild detergent and water. Dry with a clean, damp chamois. Grease and oil may be removed with naphtha or hexane.

NOTE: Do not use commercial or household cleaners containing ammonia on the sneeze guard. To avoid scratching, do not use dry cloths or scouring compounds.

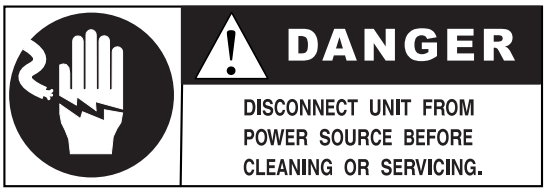

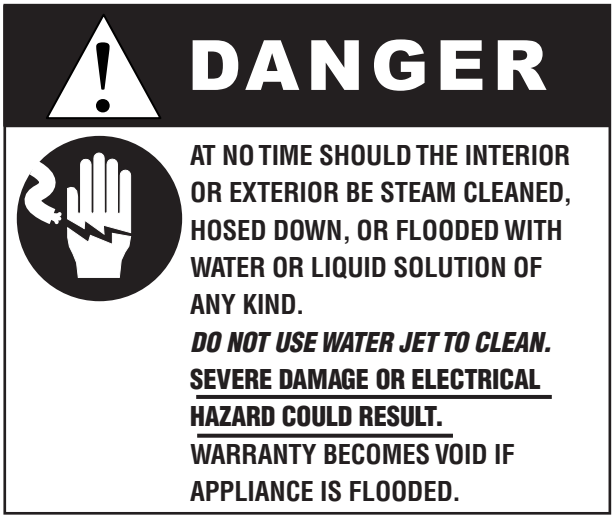

SANITATION

Food flavor and aroma are usually so closely related that it is difficult, if not impossible, to separate them. There is also an important, inseparable relationship between cleanliness and food flavor. Cleanliness, top operating efficiency, and appearance of equipment contribute considerably to savory, appetizing foods. Good equipment that is kept clean, works better and lasts longer.

Most food imparts its own particular aroma and many foods also absorb existing odors. Unfortunately, during this absorption, there is no distinction between GOOD and BAD odors. The majority of objectionable flavors and odors troubling food service operations are caused by bacteria growth. Sourness, rancidity, mustiness, stale or other OFF flavors are usually the result of germ activity.

The easiest way to insure full, natural food flavor is through comprehensive cleanliness. This means good control of both visible soil (dirt) and invisible soil (germs). A thorough approach to sanitation will provide essential cleanliness. It will assure an attractive appearance of equipment, along with maximum efficiency and utility. More importantly, a good sanitation program provides one of the key elements in the prevention of food-borne illnesses.

A controlled holding environment for prepared foods is just one of the important factors involved in the prevention of food-borne illnesses. Temperature monitoring and control during receiving, storage, preparation, and the service of foods are of equal importance.

The most accurate method of measuring safe temperatures of both hot and cold foods is by internal product temperature. A quality thermometer is an effective tool for this purpose, and should be routinely used on all products that require holding at a specific temperature.

A comprehensive sanitation program should focus on the training of staff in basic sanitation procedures. This includes personal hygiene, proper handling of raw foods, cooking to a safe internal product temperature, and the routine monitoring of internal temperatures from receiving through service.

Most food-borne illnesses can be prevented through proper temperature control and a comprehensive program of sanitation. Both these factors are important to build quality service as the foundation of customer satisfaction. Safe food handling practices to prevent food-borne illness is of critical importance to the health and safety of your customers. HACCP, an acronym for Hazard Analysis (at) Critical Control Points, is a quality control program of operating procedures to assure food integrity, quality, and safety. Taking steps necessary to augment food safety practices are both cost effective and relatively simple. While HACCP guidelines go far beyond the scope of this manual, additional information is available by contacting:

Center for Food Safety and Applied Nutrition
Food and Drug Administration
1-888-SAFEFOOD

INTERNAL FOOD PRODUCT TEMPERATURES		
HOT FOODS		
DANGER ZONE	40° TO 140°F	(4° TO 60°C)
CRITICAL ZONE	70° TO 120°F	(21° TO 49°C)
SAFE ZONE	140° TO 165°F	(60° TO 74°C)
COLD FOODS		
DANGER ZONE	ABOVE 40°F	(ABOVE 4°C)
SAFE ZONE	36°F TO 40°F	(2°C TO 4°C)
FROZEN FOODS		
DANGER ZONE	ABOVE 32°F	(ABOVE 0°C)
CRITICAL ZONE	0° TO 32°F	(-18° TO 0°C)
SAFE ZONE	0°F OR BELOW	(-18°C OR BELOW)

SERVICE

100-HSL/BCS-2

3/22/07

Service Parts List

	Part Description	Unit Quantity	Alto-Shaam Part No.
1.	LEGS, 1" (25mm)	4	LG-2043
	NYLON SCREWS	4	SC-2464
2.	BOTTOM ASSEMBLY	1	4496
3.	BOTTOM ASSBLY MTG SCREWS	16	SC-2459
4.	INSULATION — 26" x 28" (660mm x 711mm)	1	IN-2381
5.	HEATING ELEMENT CLAMP	1	1224
6.	THERMOSTAT CAPILLARY BULB	1	_____
7.	CERAMIC FIBER PAPER 17-3/4" x 20-1/2" (451mm x 521mm)	1	IN-3043
8.	HEATING ELEMENT	1	CB-3524
9.	CABLE CONNECTOR (Large)	3	CR-3067
10.	CABLE CONNECTOR (Small)	2	CR-3066
11.	CONTROL PLATE	1	11570
12.	CONTROL PLATE MTG. SCREWS	4	SC-2459
13.	THERMOSTAT	1	TT-3498
14.	THERMOSTAT KNOB	1	KN-3473
15.	INDICATOR LIGHT (125V)	1	LI-3027
	INDICATOR LIGHT (230V)	1	LI-3951
16.	SWITCH	2	SW-34427
	COVER	2	CV-27434
17.	CORD & PLUG SET (125V)	1	CD-3232
	CORD & PLUG SET (230V)	1	CD-3922
18.	LAMP BLOCK BOTTOM COVER	2	1221
19.	LAMP BLK BTM CVR MTG SCREWS	2	SC-2459
20.	CONNECTORS	2	CR-3068
21.	LAMP MOUNTING BLOCK (Silver)	2	BK-2668
22.	LAMP MOUNTING BLOCK BRACKET	2	1223
23.	LAMP MOUNTING BLOCK MOUNTING SCREWS	4	SC-22378
24.	LAMP ASSEMBLY	2	LP-3525
25.	LAMP (125V)	2	LP-3016
	LAMP (230V)	2	LP-3319
26.	CUTTING BOARD	1	BA-2054
27.	GROUND STUD	1	ST-24173

100-HSL/BCS-2S

Service Parts List

	Part Description	Unit Quantity	Alto-Shaam Part No.
1.	LEGS, 1" (25mm)	4	LG-2043
	NYLON SCREWS	4	SC-2464
2.	BOTTOM ASSEMBLY	1	4496
3.	BOTTOM ASSBLY MTG SCREWS	16	SC-2459
4.	INSULATION — 26" x 28" (660mm x 711mm)	1	IN-2381
5.	HEATING ELEMENT CLAMP	1	1224
6.	THERMOSTAT CAPILLARY BULB	1	_____
7.	CERAMIC FIBER PAPER 17-3/4" x 20-1/2" (451mm x 521mm)	1	IN-3043
8.	HEATING ELEMENT	1	CB-3524
9.	CABLE CONNECTOR (Large)	1	CR-3067
10.	CABLE CONNECTOR (Small)	1	CR-3066
11.	CONTROL PLATE	1	11570
12.	CONTROL PLATE MTG. SCREWS	4	SC-2459
13.	THERMOSTAT	1	TT-3498
	THERMOSTAT KNOB	1	KN-3473
14.	INDICATOR LIGHT (125V)	1	LI-3027
	INDICATOR LIGHT (230V)	1	LI-3951
15.	SWITCH	2	SW-34427
	COVER	2	CV-27434
16.	CORD & PLUG SET (125V)	1	CD-3232
	CORD & PLUG SET (230V)	1	CD-3922
17.	LAMP BLOCK BOTTOM COVER	2	1221
18.	LAMP BLOCK BOTTOM COVER MOUNTING SCREWS	4	SC-2459
19.	CONNECTORS	4	CR-3068
20.	LAMP MTG. BLOCK (Silver)	2	BK-2668
21.	LAMP MTG. BLOCK BRACKET	2	1223
22.	LAMP MOUNTING BLOCK MOUNTING SCREWS	8	SC-22378
23.	LAMP ASSEMBLY (Silver)	2	LP-3525
24.	LAMP (125V)	2	LP-3016
	LAMP (230V)	2	LP-3319
25.	SNEEZE GUARD BRACKET, RH (Silver)	1	BT-2665
26.	SNEEZE GUARD BRACKET, LH (Silver)	1	BT-2666
27.	SNEEZE GUARD BRACKET MOUNTING SCREWS	4	SC-2425
28.	SNEEZE GUARD	1	GD-2667
29.	SNEEZE GUARD SHOULDER STUDS	4	ST-2546
30.	CUTTING BOARD	1	BA-2054
31.	GROUND STUD	1	ST-24173

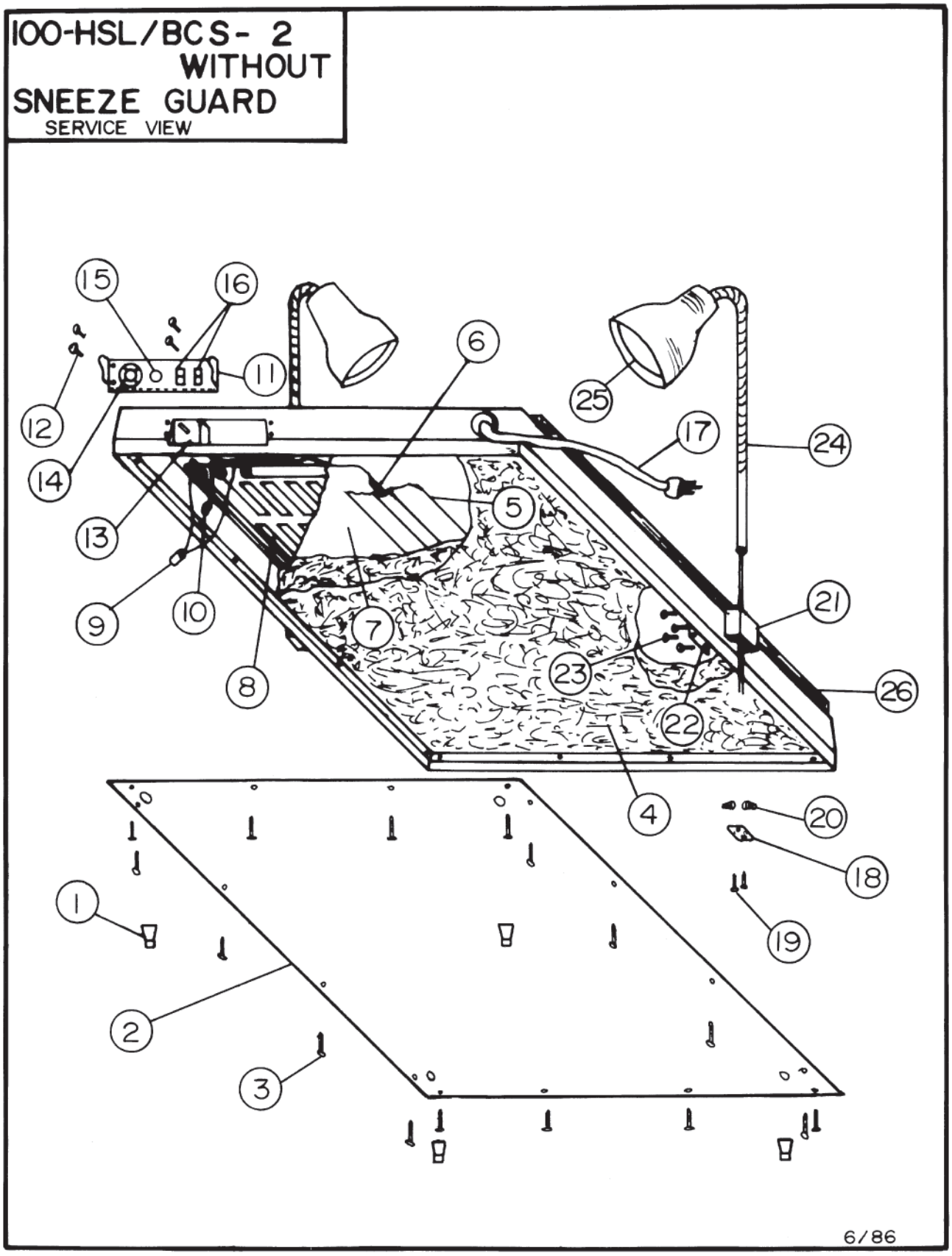
100-HSL/BCS- 2
WITHOUT
SNEEZE GUARD
SERVICE VIEW
1
2
3
4
5
6
7
8
9
10
11
12
13
14
15
16
17
18
19
20
21
22
23
24
25
26
6/86

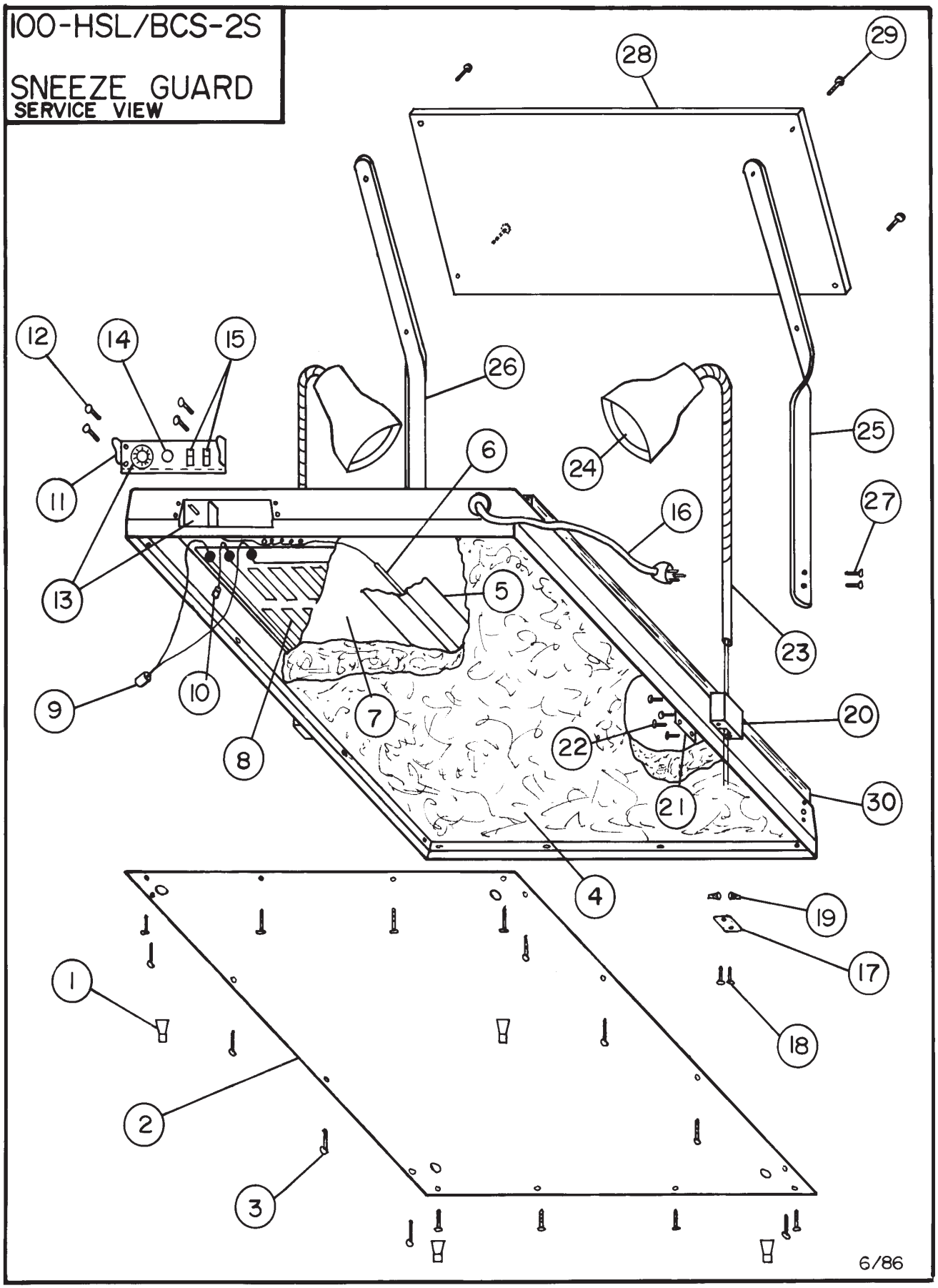
100-HSL/BCS-2S
SNEEZE GUARD
SERVICE VIEW
1
2
3
4
5
6
7
8
9
10
11
12
13
14
15
16
17
18
19
20
21
22
23
24
25
26
27
28
29
30
6/86

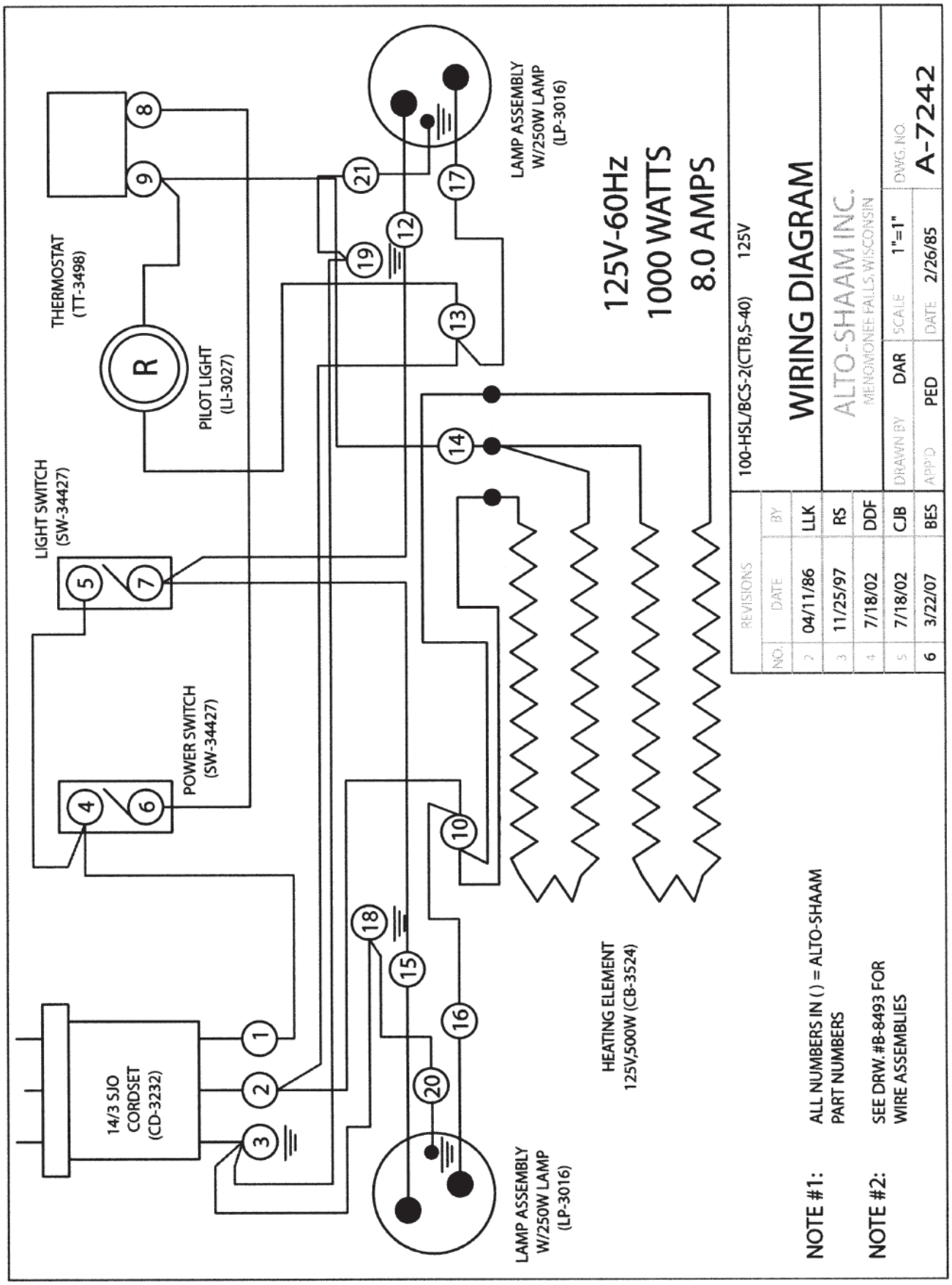
THERMOSTAT
(TT-3498)
PILOT LIGHT
(LI-3027)
LIGHT SWITCH
(SW-34427)
POWER SWITCH
(SW-34427)
14/3 SJO
CORDSET
(CD-3232)
LAMP ASSEMBLY
W/250W LAMP
(LP-3016)
HEATING ELEMENT
125V,500W (CB-3524)
LAMP ASSEMBLY
W/250W LAMP
(LP-3016)
125V-60Hz
1000 WATTS
8.0 AMPS
100-HSL/BCS-2(CTB,S-40) 125V
WIRING DIAGRAM
ALTO-SHAAM INC.
MENOMONEE FALLS, WISCONSIN
DRAWN BY DAR
SCALE 1"=1"
DWG. NO.
A-7242
APP'D PED
DATE 2/26/85
REVISIONS
NO. DATE BY
2 04/11/86 LLK
3 11/25/97 RS
4 7/18/02 DDF
5 7/18/02 CJB
6 3/22/07 BES
NOTE #1: ALL NUMBERS IN ( ) = ALTO-SHAAM PART NUMBERS
NOTE #2: SEE DRW. #B-8493 FOR WIRE ASSEMBLIES

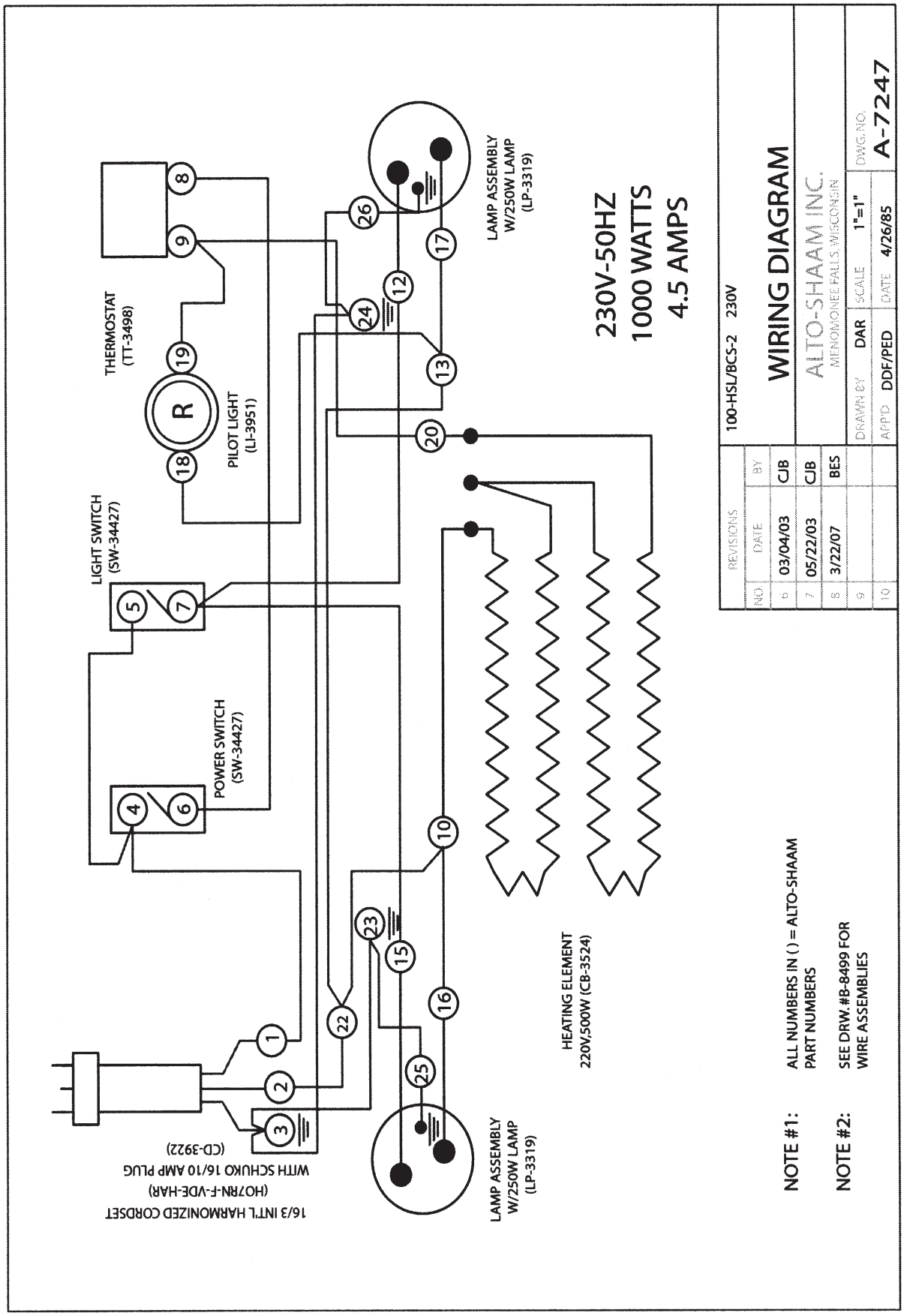
THERMOSTAT
(TT-3498)
PILOT LIGHT
(LI-3951)
LIGHT SWITCH
(SW-34427)
POWER SWITCH
(SW-34427)
LAMP ASSEMBLY
W/250W LAMP
(LP-3319)
230V-50HZ
1000 WATTS
4.5 AMPS
HEATING ELEMENT
220V,500W (CB-3524)
16/3 INT'L HARMONIZED CORDSET
(HO7RN-F-VDE-HAR)
WITH SCHUKO 16/10 AMP PLUG
(CD-3922)
LAMP ASSEMBLY
W/250W LAMP
(LP-3319)
NOTE #1: ALL NUMBERS IN ( ) = ALTO-SHAAM PART NUMBERS
NOTE #2: SEE DRW. #B-8499 FOR WIRE ASSEMBLIES
REVISIONS
NO. DATE BY
6 03/04/03 CJB
7 05/22/03 CJB
8 3/22/07 BES
9
10
100-HSL/BCS-2 230V
WIRING DIAGRAM
ALTO-SHAAM INC.
MENOMONEE FALLS, WISCONSIN
DRAWN BY DAR
SCALE 1"=1"
DWG. NO.
A-7247
APP'D DDF/PED
DATE 4/26/85

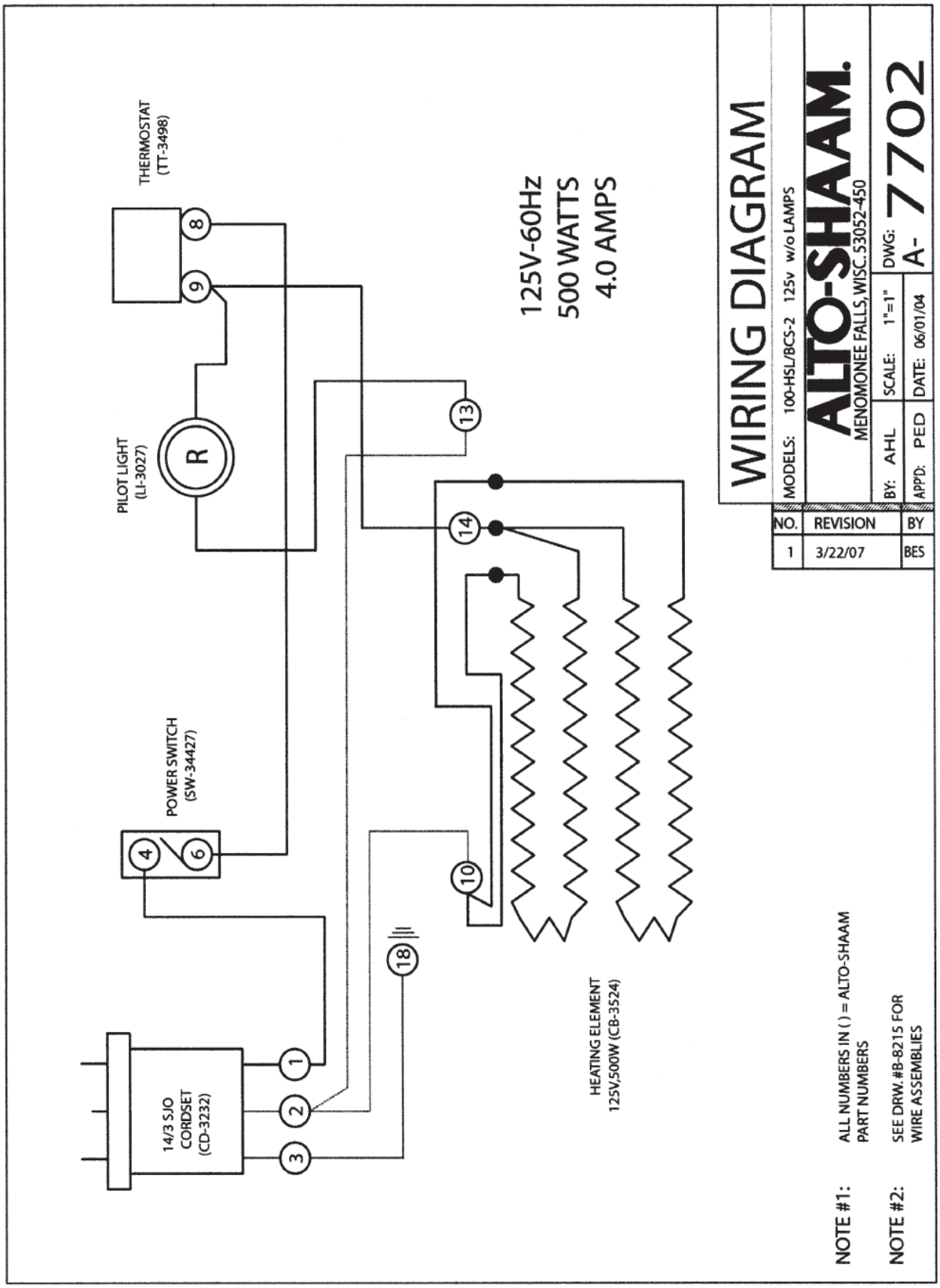
THERMOSTAT
(TT-3498)
8
9
PILOT LIGHT
(LI-3027)
R
13
14
POWER SWITCH
(SW-34427)
4
6
10
18
14/3 SJO
CORDSET
(CD-3232)
1
2
3
HEATING ELEMENT
125V,500W (CB-3524)
125V-60Hz
500 WATTS
4.0 AMPS
WIRING DIAGRAM
MODELS: 100-HSL/BCS-2 125v w/o LAMPS
ALTO-SHAAM.
MENOMONEE FALLS, WISC. 53052-450
BY: AHL
SCALE: 1"=1"
DWG: A- 7702
APP'D: PED
DATE: 06/01/04
NO. REVISION BY
1 3/22/07 BES
NOTE #1: ALL NUMBERS IN ( ) = ALTO-SHAAM PART NUMBERS
NOTE #2: SEE DRW. #B-8215 FOR WIRE ASSEMBLIES

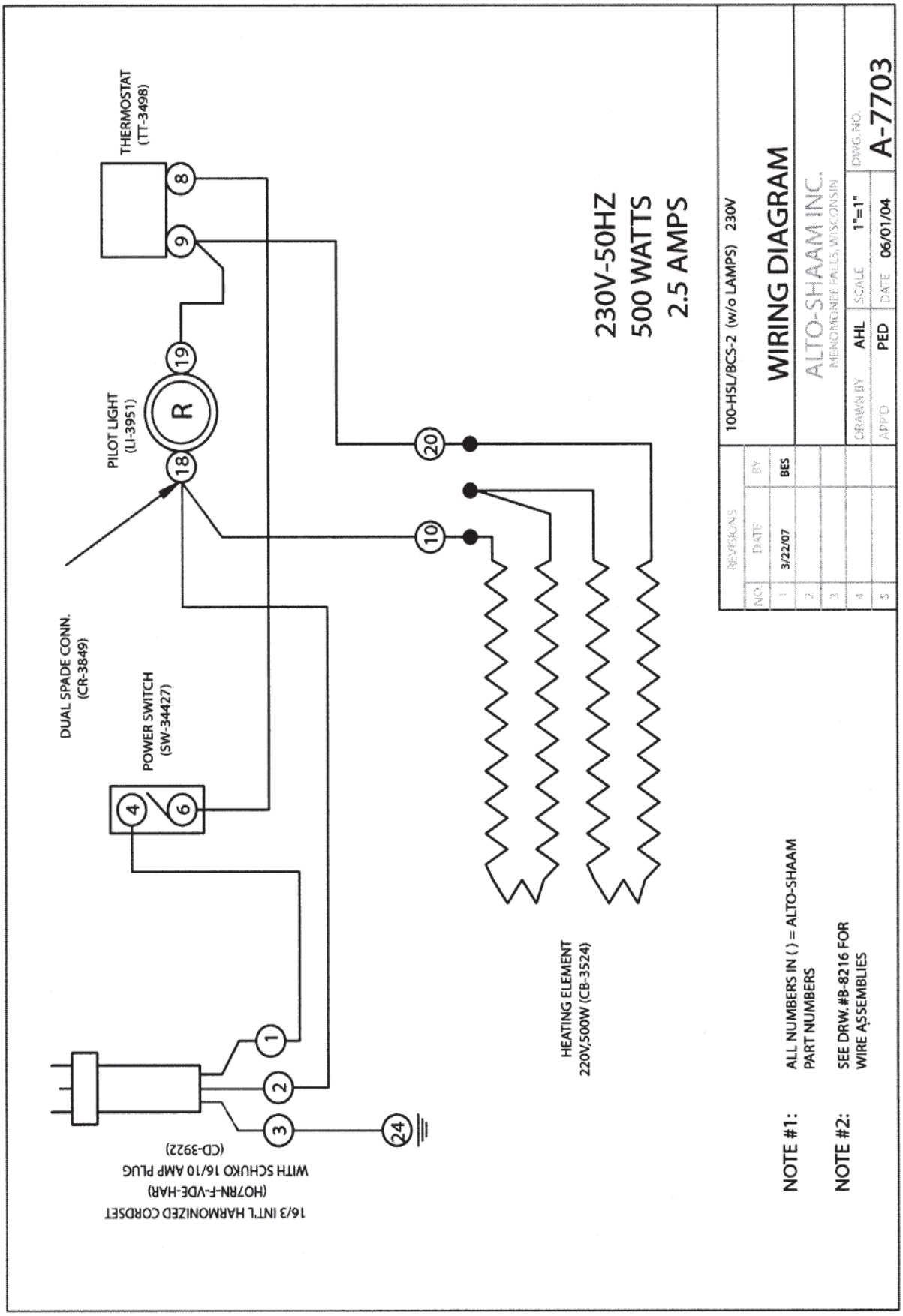
THERMOSTAT
(TT-3498)
8
9
19
PILOT LIGHT
(LI-3951)
R
18
20
10
DUAL SPADE CONN.
(CR-3849)
POWER SWITCH
(SW-34427)
4
6
1
2
3
24
16/3 INT'L HARMONIZED CORDSET
(HO7RN-F-VDE-HAR)
WITH SCHUKO 16/10 AMP PLUG
(CD-3922)
HEATING ELEMENT
220V,500W (CB-3524)
230V-50HZ
500 WATTS
2.5 AMPS
NOTE #1: ALL NUMBERS IN ( ) = ALTO-SHAAM PART NUMBERS
NOTE #2: SEE DRW. #B-8216 FOR WIRE ASSEMBLIES
REVISIONS
NO. DATE BY
1 3/22/07 BES
2
3
4
5
100-HSL/BCS-2 (w/o LAMPS) 230V
WIRING DIAGRAM
ALTO-SHAAM INC.
MENOMONEE FALLS, WISCONSIN
DRAWN BY AHL
APP'D PED
SCALE 1"=1"
DATE 06/01/04
DWG. NO.
A-7703

TRANSPORTATION DAMAGE and CLAIMS

All Alto-Shaam equipment is sold F.O.B. shipping point, and when accepted by the carrier, such shipments become the property of the consignee.

Should damage occur in shipment, it is a matter between the carrier and the consignee. In such cases, the carrier is assumed to be responsible for the safe delivery of the merchandise, unless negligence can be established on the part of the shipper.

1. Make an immediate inspection while the equipment is still in the truck or immediately after it is moved to the receiving area. Do not wait until after the material is moved to a storage area.

2. Do not sign a delivery receipt or a freight bill until you have made a proper count and inspection of all merchandise received.

3. Note all damage to packages directly on the carrier's delivery receipt.

4. Make certain the driver signs this receipt. If he refuses to sign, make a notation of this refusal on the receipt.

5. If the driver refuses to allow inspection, write the following on the delivery receipt:
   Driver refuses to allow inspection of containers for visible damage.

6. Telephone the carrier's office immediately upon finding damage, and request an inspection. Mail a written confirmation of the time, date, and the person called.

7. Save any packages and packing material for further inspection by the carrier.

8. Promptly file a written claim with the carrier and attach copies of all supporting paperwork.

We will continue our policy of assisting our customers in collecting claims which have been properly filed and actively pursued. We cannot, however, file any damage claims for you, assume the responsibility of any claims, or accept deductions in payment for such claims.

ALTO SHAAM® LIMITED WARRANTY

Alto-Shaam, Inc. warrants to the original purchaser that any original part that is found to be defective in material or workmanship will, at Alto-Shaam's option, subject to provisions hereinafter stated, be replaced with a new or rebuilt part.

The labor warranty remains in effect one (1) year from installation or fifteen (15) months from the shipping date, whichever occurs first. Alto-Shaam will bear normal labor charges performed during standard business hours, and excluding overtime, holiday rates or any additional fees.

The parts warranty remains in effect for one (1) year from installation or fifteen (15) months from the shipping date, whichever occurs first.

However, the heating element on Halo Heat® cook/hold ovens and the refrigeration compressor on Alto-Shaam Quickchillers™ are warranted for a period of five (5) years from installation. The labor warranty is the same as stated above; namely, for one (1) year from installation or fifteen (15) months from the shipping date, whichever occurs first.

THIS WARRANTY DOES NOT APPLY TO:

1. Calibration.
2. Replacement of light bulbs and/or the replacement of display case glass due to damage of any kind.
3. Equipment damage caused by accident, shipping, improper installation or alteration.
4. Equipment used under conditions of abuse, misuse, carelessness or abnormal conditions including, but not limited to, equipment subjected to harsh or inappropriate chemicals including, but not limited to, compounds containing chloride or quaternary salts, poor water quality, or equipment with missing or altered serial numbers.
5. Damage incurred as a direct result of poor water quality, inadequate maintenance of steam generators and/or surfaces affected by water quality. Water quality and required maintenance of steam generating equipment is the responsibility of the owner/operator.
6. Damage caused by use of any cleaning agent other than Alto-Shaam's Combitherm® Cleaner including, but not limited to, damage due to chlorine or other harmful chemicals. Use of Alto-Shaam's Combitherm® Cleaner on Combitherm® ovens is highly recommended.
7. Any losses or damage resulting from malfunction, including loss of product or consequential or incidental damages of any kind.
8. Equipment modified in any manner from original model, substitution of parts other than factory authorized parts, removal of any parts including legs, or addition of any parts.

This warranty is exclusive and is in lieu of all other warranties, expressed or implied, including the implied warranties of merchantability and fitness for a particular purpose. In no event shall Alto-Shaam be liable for loss of use, loss of revenue or profit, or loss of product, or for any indirect or consequential damages. No person except an officer of Alto-Shaam, Inc. is authorized to modify this warranty or to incur on behalf of Alto-Shaam any other obligation or liability in connection with Alto-Shaam equipment.

ALTO-SHAAM, INC.

RECORD THE MODEL AND SERIAL NUMBER OF THE APPLIANCE FOR EASY REFERENCE.
ALWAYS REFER TO BOTH MODEL AND SERIAL NUMBER IN ANY CONTACT WITH ALTO-SHAAM REGARDING THIS APPLIANCE.

Model: _____ Date Installed: _____
Voltage: _____ Purchased From: _____
Serial Number: _____ _____

W164 N9221 Water Street • P.O. Box 450 • Menomonee Falls, Wisconsin 53052-0450 • U.S.A.
PHONE: 262.251.3800 • 800.558-8744 USA/CANADA FAX: 262.251.7067 • 800.329.8744 U.S.A. ONLY
WEBSITE: www.alto-shaam.com

PRINTED IN U.S.A.